BESISTA International GmbH
Heckenweg 1
DE 73087 Bad Boll

BESISTA® rod systems

Tel +49 7164 9123 9-0
Fax +49 7164 9123 9-17
Info@besista.com

ETA-08/0038 **DIBt** Berlin **0672-CPD-0091** **MPA** Stuttgart **www.besista.com**

High-grade tension rod systems and compression rods for buildings and civils

Technical data

all dimensions in mm

Please make use of our unique, cost-effective thread sizes M14, 18, 22, 33, 39, 45 and 68, which are marked red in the picture. Sizes **M8, 27, 52, 60, 72 and 76** – half-red in the picture – are likewise only partially available from other manufacturers. BESISTA® is the only tension rod manufacturer to supply all possible sizes between M8 and M76. **This allows tremendous cost savings while conserving valuable materials.** To capitalize on these relevant advantages, unique to BESISTA®, **please select the optimum sizes in your structural design** and always state the limit tensile forces in the tendering specification.

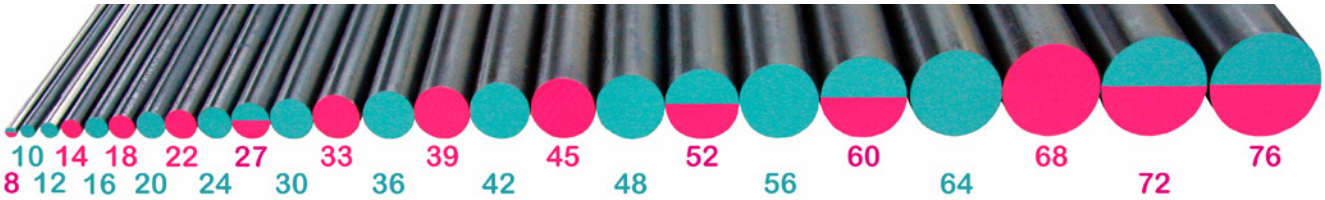

Our tension rods are made of S540N, an extra-high-quality modified S460N with a guaranteed yield strength of 540 N/mm². Another unique feature of BESISTA® are **hot-dip galvanized rod threads for sustainable construction.**

BESISTA® 540 contents

BESISTA International GmbH
Heckenweg 1
DE 73087 Bad Boll

BESISTA® rod systems

Tel +49 7164 9123 9-0
Fax +49 7164 9123 9-17
Info@besista.com

ETA-08/0038 DIBt Berlin CE 0672-CPD-0091 MPA Stuttgart

www.besista.com

Dimensions of rod anchors (fork heads) BESISTA® 540

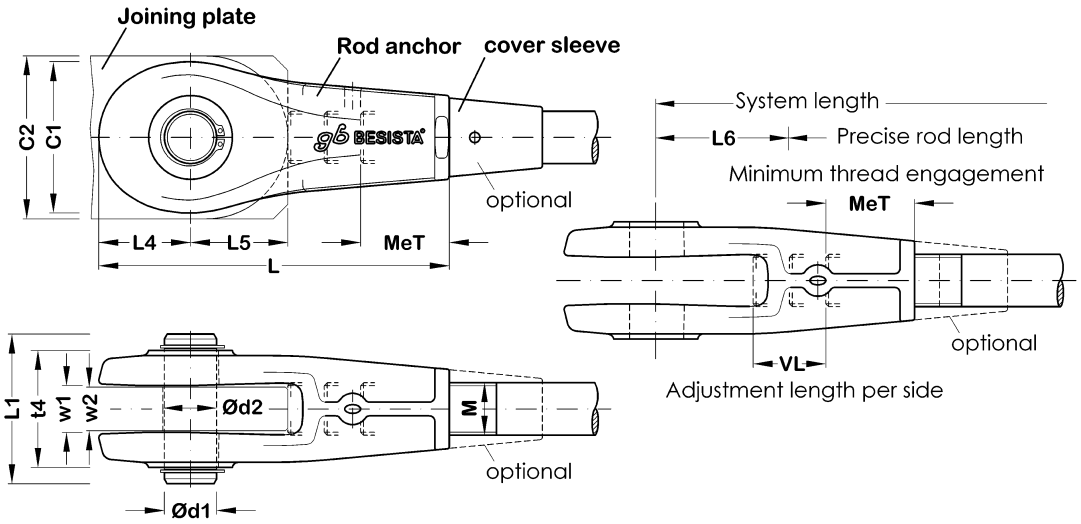

Note: Given that, for BESISTA tension rod systems, the required thread screw-in depth and corrosion protection are ensured by the inspection hole, the cover sleeves are not structurally necessary.

M	Rod anchor								Pin			Gusset plate			
	C1	L4	w1	MeT	t4	L	VL	L6	Ø d1	L1	Steel grade	Ø d2	w2	L5	C2
8	24	14.2	7	15.3	19	59.5	14	23	8	29.6	S540N (R_e=540 N/mm², R_m=720 N/mm²), 8.8 or 10.9	8.5	6	16	28
10	29	17.5	9.2	18	23	71.5	16	28	10	32.3		11	8	20	35
12	35.4	21	11.2	22	27.2	83.5	18	32	12	38.4		13	10	23	41
14	41.2	24.5	13.4	24.5	31.8	96	20	37	14	41.9		15	12	27	47
16	45.6	27.5	16.4	28	38.5	108.5	22	42	16	48.4		17	15	31	52
18	51.6	31.5	16.6	31.5	40.2	122	26	46	18	53.9		19	15	34	57
20	56	35	19.6	35	46.5	135	28	51	20	59.9		21	18	37	62
22	63	38.5	19.6	37.5	50	148	30	57	22	62.9		23	18	42	70
24	69	42	21.8	41	54.5	164	36	63	24	67.8		25	20	45	75
27	78	47	23.8	46	61.4	184	40	71	27	75.1	S540N (R_e = 540 N/mm² R_m = 720 N/mm²)	28	22	51	85
30	86	52.5	27	51	67.6	203.5	44	78	30	82.1		31	25	56	93
33	95	57.5	32.2	56.5	78	220	46	83	33	92.6		34	30	60	99
36	104	63	32.2	61	80.8	241	50	92	36	98.8		37	30	67	112
39	112	68	37.4	66.5	90	259.5	54	98	39	106.8		40	35	71	117
42	121	73.5	37.4	70	95	279.5	58	107	42	115		43	35	78	130
45	129	79	42.8	76	105	301	64	114	45	126		46	40	82	136
48	138	84	42.5	81.5	110	325.5	70	125	48	129		50	40	91	153
52	149	91	47.8	87	120	351	74	137	52	145		54	45	100	167
56	161	99	52.8	93	132	378	80	146	56	158	S540N (R_e=540 N/mm² R_m=720 N/mm²)	58	50	106	175
60	173	105	58	99	142	401	84	155	60	168		62	55	113	187
64	184	112	58	106	147	431	92	167	64	175		66	55	122	203
68	196	119.5	63	113	160	457.5	96	177	68	188		70	60	129	214
72	206	126	68	119	168	480	100	185	72	196		74	65	135	224
76	221	134.5	73	126	183	509.5	108	195	76	212		78	70	141	244

BESISTA International GmbH
Heckenweg 1
DE 73087 Bad Boll

BESISTA® rod systems

Tel +49 7164 9123 9-0
Fax +49 7164 9123 9-17
Info@besista.com

ETA-08/0038 **DIBt** Berlin **0672-CPD-0091** **MPA** Stuttgart

www.besista.com

Dimensions of BESISTA® 540 tension rods

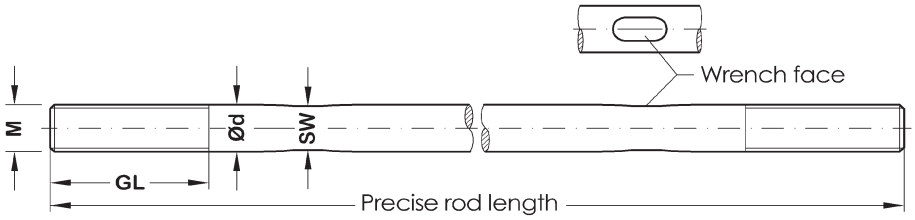

Our tension rods are made of S540N, an extra-high-quality modified S460N with a guaranteed yield strength of 540 N/mm². Tension rods of **S540N** must be supplied exclusively by BESISTA International GmbH. In order to avoid confu-sions with steel of lower strength, BESISTA International GmbH is always supplies S540N as standard - even if S460N, S355 or S235 would be sufficient under the design.

Tension rods of **S355** and **S235** can also be supplied by others. In such cases, the quality has to be certified by the client. Compliance with the provisions of the European Technical Approval issued by DIBt, Berlin, and BESISTA International GmbH shall be ensured. As a rule, however, tension rods should be obtained from BESISTA International GmbH together with the rod anchors as an integral BESISTA tension rod system.

M	GL	Ø d	SW
8	34	8	7
10	39	10	9
12	45	12	11
14	51	14	13
16	57	16	15
18	65	18	16
20	71	20	18
22	75	22	20
24	87	24	22
27	96	27	25
30	107	30	28
33	114	33	30
36	124	36	33
39	133	39	36
42	142	42	39
45	154	45	42
48	166	48	45
52	175	52	49
56	189	56	52
60	199	60	56
64	216	64	60
68	227	68	64
72	237	72	68
76	252	76	72

BESISTA International GmbH
Heckenweg 1
DE 73087 Bad Boll

BESISTA® rod systems

Tel +49 7164 9123 9-0
Fax +49 7164 9123 9-17
Info@besista.com

ETA-08/0038 DIBt Berlin CE 0672-CPD-0091 MPA Stuttgart

www.besista.com

Dimensions of BESISTA® 540 extension and tensioning sleeves

Extension sleeves

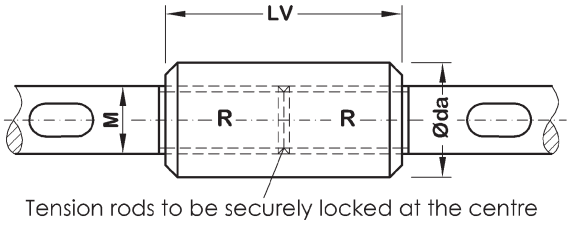

Tensioning sleeves

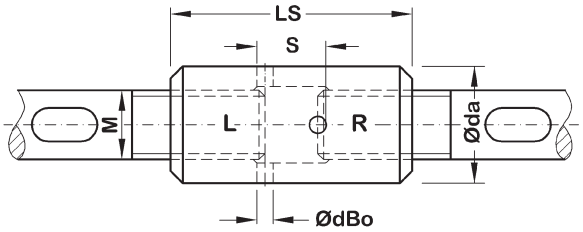

The extension sleeves with continuous, right-hand internal threads are used to extend and secure the tension rods. For additional safety the threads of BESISTA sleeves are longer than necessary.

Note: The tension rods must be **securely locked** at the centre of the sleeve to ensure that the complete rod is turned when tensioning. The thread screw-in depth is reached when the rod threads project from the sleeve on both sides by no more than 4 thread pitches.

The tensioning sleeves with left- and right-hand threads are used to pretension the tension rods. They can also be used as “turnbuckles“, e.g. in order to increase the adjustment distance.
Note: The required thread screw-in depth is reached when, after the tensioning process, the threads are visible in both inspection holes.

M	Extension sleeve (VH)			Tensioning sleeve (SH)				
	LV	Ø da S540	Ø da S355	LS	Ø da S540	Ø da S355	S (tensioning)	Ø dbo (hole)
8	28	14.0		28	14.0		8	4
10	35	16.0		35	16.0		10	4
12	42	20.0		42	20.0		12	5
14	49	22.0		49	22.0		14	5
16	56	27.0		56	27.0		16	6
18	63	30.0		63	30.0		18	6
20	70	33.0		70	33.0		20	6
22	77	36.0		77	36.0		22	6
24	84	39.0		84	39.0		24	8
27	95	42.0		95	42.0		27	8
30	105	48.0		105	48.0		30	8
33	116	52.0		116	52.0		33	8
36	126	56.0		126	56.0		36	10
39	137	64.0		137	64.0		39	10
42	147	68.0		147	68.0		42	10
45	158	72.0		158	72.0		45	10
48	168	76.0		168	76.0		48	10
52	182		88.9	182		88.9	52	12
56	196		95.0	196		95.0	56	12
60	210		101.6	210		101.6	60	12
64	224		108.0	224		108.0	64	12
68	238		114.3	238		114.3	68	15
72	252		121.0	252		121.0	72	15
76	266		127.0	266		127.0	76	15

BESISTA International GmbH
Heckenweg 1
DE 73087 Bad Boll

BESISTA® rod systems

Tel +49 7164 9123 9-0
Fax +49 7164 9123 9-17
Info@besista.com

ETA-08/0038 DIBt Berlin CE 0672-CPD-0091 MPA Stuttgart

www.besista.com

Dimensions of BESISTA® 540 circular discs

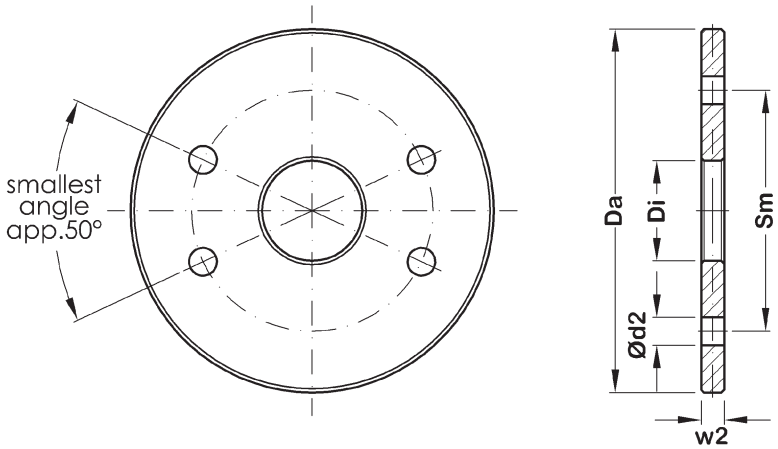

The circular discs are supplied in S355 as standard. We fabricate special larger discs for cases where the smallest angle is less than 50°. See “Special components” in MENU.

M	Circular discs				
	Da	Di	Sm	w2	Ød2
8	96	30	64	6	8.5
10	118	36	78	8	11
12	140	42	94	10	13
14	162	48	108	12	15
16	184	54	122	15	17
18	204	60	136	15	19
20	224	66	150	18	21
22	248	72	164	18	23
24	268	78	178	20	25
27	302	88	200	22	28
30	334	98	222	25	31
33	364	108	244	30	34
36	400	118	266	30	37
39	430	128	288	35	40
42	466	138	310	35	43
45	496	148	332	40	46
48	534	158	354	40	50
52	582	170	382	45	54
56	626	184	414	50	58
60	668	196	442	55	62
64	718	210	474	55	66
68	764	226	506	60	70
72	800	234	530	65	74
76	848	248	566	70	78

BESISTA International GmbH DE 73087 Bad Boll Heckenweg 1 Tel +49 7164 9123 9-0 Fax -17 Info@besista.com

Dimensions of BESISTA® 540 compression rod connections for steel and timber

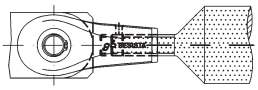

Type 1: **machined solid rods up to Ø 76 mm made of S540N**

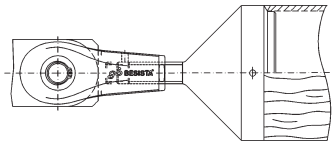

Type 2: **one-part, as machined component made of S355 for timber or for welding to steel tubes made of S355**

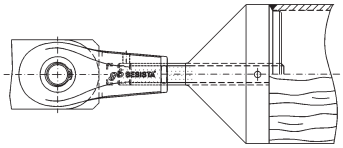

Type 3: **two-part, as machined component made of S355 for timber or for welding to steel tubes made of S355, though with higher-strength threaded pins made of S540N**

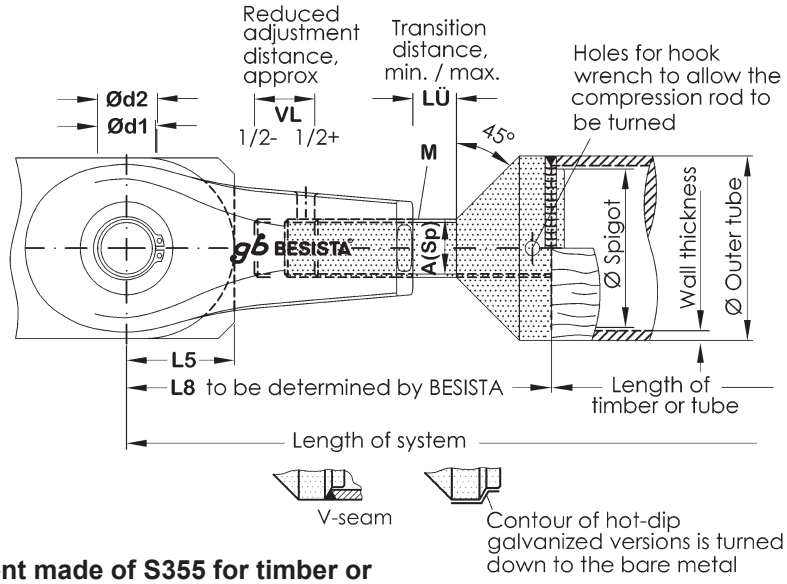

All types are individually manufactured by BESISTA International GmbH in accordance with the client's structural check on load-carrying capacity. **Welding of the compression rod connections to the steel tubes is carried out by others.**

Please note: **For compression loads, the pin diameters are larger** than those of standard pins for tensile loads. In order to limit the critical transition distance **LÜ**, the adjustment distance **LV** is also shorter than for tension rods.

Technical data compression rod connections

M	Ø d1	Ø d1	L5	t	mm² A (Sp)	VL approx.	Transition distance LÜ min	Transition distance LÜ max	L8	Ø Tube	Wall thickness	V-seam
8	10	10.5	16	6	36.6	8	5	13	Depends on selected outer diameter of tube. Since there are over 6.000 variants, L8 is determined by BESISTA International. Please specify system lengths	In accordance with structural check on load-carrying capacity		
10	12	13	20	8	58	10	6	16				
12	14	15	23	10	84.3	12	7	19				
14	16	17	27	12	115	14	8	22				
16	18	19	31	15	157	16	9	25				
18	20	21	34	15	193	18	11	29				
20	22	23	37	18	245	20	12	32				
22	24	25	42	18	303	22	13	35				
24	27	28	45	20	353	24	14	38				
27	30	31	51	22	459	27	14	41				
30	33	34	56	25	561	30	15	45				
33	36	37	60	30	694	33	17	50				
36	39	40	67	30	817	36	18	54				
39	42	43	71	35	976	39	19	58				
42	45	46	78	35	1121	42	20	62				
45	48	49	82	40	1306	45	21	66				
48	52	54	91	40	1473	48	21	69				
52	56	58	100	45	1758	52	21	73				
56	60	62	106	50	2030	56	24	80				
60	64	66	113	55	2362	60	24	84				
64	68	70	122	55	2676	64	26	90				
68	72	74	129	60	3055	68	26	94				
72	76	78	135	65	3463	72	26	98				
76	80	82	141	70	3889	76	26	102				

BESISTA International GmbH DE 73087 Bad Boll Heckenweg 1 Tel +49 7164 9123 9-0 Fax -17 Info@besista.com

Data form, compression rod connections

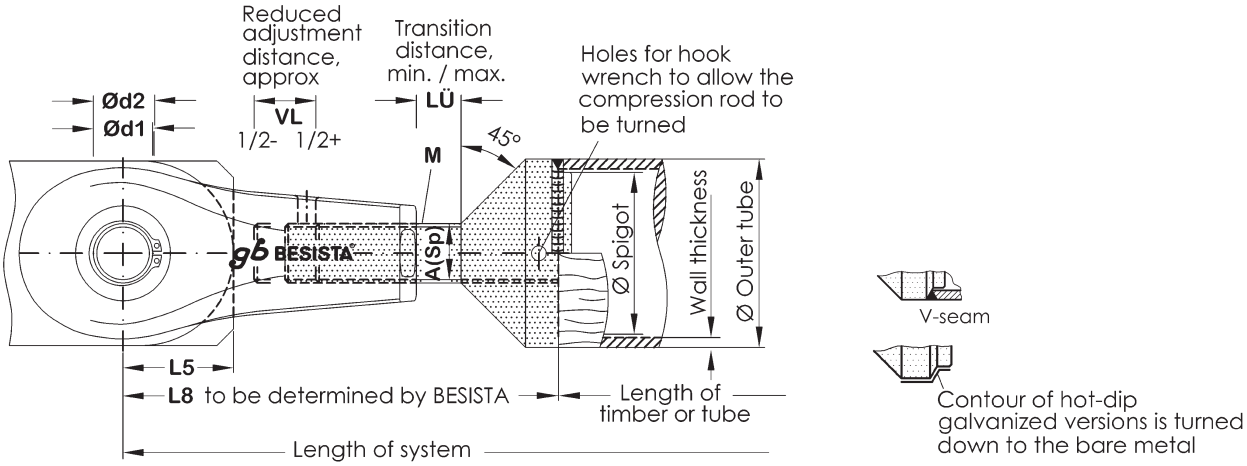

To be filled in by the customer			BESISTA® 540
☐ Type 1	☐ Types 2 and 3	Building project:	Date:
Customer:		Street:	
Zip code:	Location:	Phone:	Fax:
Compression rod connections Type 1 (see page 5)		pcs.:	
Compression rod connections Type 2 a. 3 (see page 5)		left pcs.:	right pcs.:
Rod anchor size BESISTA® 540		M:	
Timber or outer tube diameter		Ø mm:	
Wall thickness of tube		mm:	
Spigot diameter - absolutely necessary		Ø mm:	
bl = black or hdg = hot-dip galvanized		☐ bl:	☐ hdg:

To be filled in by BESISTA®		
d1 Diameter of pin	Ø mm:	
d2 Bore in the gusset plate	Ø mm:	
VL Reduced adjustment distance (app. 1x M per side)	mm:	
LÜ Transition distance	min. approx. mm:	max. approx.
L8 Centre of pin to start of timber or tube	mm:	
Plate thickness	mm:	
L5 Plate projection	mm:	
A_{sp} Stress cross-sectional area	mm^2:	

Note for dimensioning: proof of buckling strength – also in transition distance LÜ – shall be provided by the structural engineer. The "BESISTA® safety rod systems" installation instructions shall be observed. The dimensions for the compression rod connections shall be individually determined by BESISTA International GmbH and the connections specially manufactured.

BESISTA® rod anchors are able to transmit both tensile and compressive forces under the European Technical Approval ETA-08/0038, see MENU "Design loads" page 4. For **compression loads**, the **pin diameters** are larger than those of standard pins for tensile loads. See MENU "Technical data" page 5 or ETA Annex 7. In order to minimize the buckling length in the transition distance LÜ, the adjustment distances are **shortened**, deviating from the standard length of the tension rods.

BESISTA® compression rod systems are available in **three types:** the lower-cost **type 1** as machined solid rods made of S540N up to Ø 76. **Type 2** as one-part machined components made of S355 for timber or for welding by others to steel tubes made of S355. **Type 3** two-part, consisting of a machined component made of S355 for timber or for welding by others and higher strength thread pins made of S540N. The connection geometry for both types is the same.

BESISTA International GmbH DE 73087 Bad Boll Heckenweg 1 Tel +49 7164 9123 9-0 Fax -17 Info@besista.com

Dimensions of BESISTA® 540 suspension rings

Suspension rings for solid rod

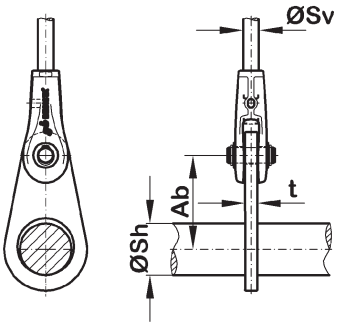

Suspension rings for extension and tensioning sleeve

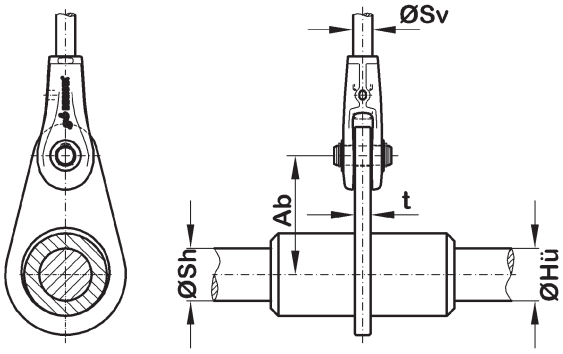

The suspension rings serve to suspend the tension rods of all BESISTA tension rod systems. Unlike sleeves with straps, they permit turning and tensioning of installed tension rods together with the precise alignment of suspended rods.

M	Suspension rings										
	Suspension rings for solid rods					Suspension rings for extension or tensioning sleeves					
	Ring no.	Ø Sh	Ø Sv	Ab	t	Ring no.	Ø Sh	Ø Hü	Ø Sv	Ab	t
8	A1	8	8	40	6	A2	8	14	8	45	6
10		10					10	16			
12		12					12	20			
14	A2	14		45		A3	14	22		50	
16		16				A4	16	27			
18		18					18	30			
20		20				A5	20	33	10	60	8
22	A3	22		50			22	36			
24		24				A6	24	39			
27	A4	27					27	42			
30		30				A7	30	48		65	
33	A5	33	10	60	8	A8	33	52	12	75	10
36		36					36	56			
39	A6	39				A9	39	64	14	85	12
42		42				A10	42	68		90	
45	A7	45		65			45	72			
48		48				A11	48	76	16	95	15
52	A8	52	12	75	10	A13	52	88.9		105	
56		56				A14	56	95		115	
60	A9	60	14	85	12	A15	60	101.6		120	
64		64				A16	64	108			
68	A10	68		90		A17	68	114.3		130	
72		72				A18	72	121		135	
76	A11	76	16	95	15	A19	76	127		140	